Microstrip Dual Junction Circulator

Part Number: KTMC-502AS7

Main Features:

- ☐ Frequency Range: 5.2GHz - 5.7GHz
- ☐ Small Size, Thin Film Technology
- ☐ High Isolation, Low Insertion Loss
- ☐ Wide Operating Temperature : -55℃~+85℃
- ☐ Commercial, Military and Space Applications

Electrical Specifications at Room Temperature:

Part Number	Freq. Range (GHz)	Bandwidth Max. (MHz)	Insertion Loss Max. (dB)	Isolation Min. (dB)	VSWR Max.	Load Power (W)	Connector Type
KTMC-502A7	5.2 - 5.7	full	0.4(1→2) 0.7(2→3)	20(2→1) 39(3→2)	1.25	10	GWB

Mechanical Dimensions (mm):

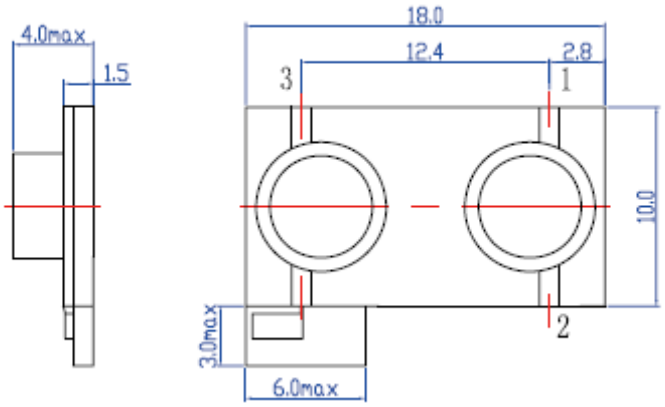

HOW TO ORDER

KTMC – XXX – XXX

Kete Microstrip Circulators — KTMC

Series Numbers — XXX

Random Numbers — XXX

No. 981, Baozhou Road, Quanzhou, Fujian, China (PC: 362000) ◇Web: www.ketemicro.com
Tel: 86-595-22597735 ◇Fax: 86-595-22557059 ◇E-mail: sales@ketemicro.com