Surface Mount Circulators

Part Number: KTSC-102S06

Key Features

- Vibration Resistance, Shock Resistance
- Compact Structure, Small Size
- High Frequency Characteristic
- High Production Efficiency
- Operating Temperature Range: -40℃~+85℃
- Widely Used in All Kinds of Base Stations, Small Power Amplifier etc.

Electrical Specifications at Room (25℃±5℃) Temperature

Part Number	Freq. Range (GHz)	Relative Bandwidth	Insertion Loss Max. (dB)	Isolation Min. (dB)	VSWR Max.	Connector Type
KTSC-102S06	0.8 - 2.2	10%	0.3	23	1.20	SMD

Mechanical Dimensions (mm)

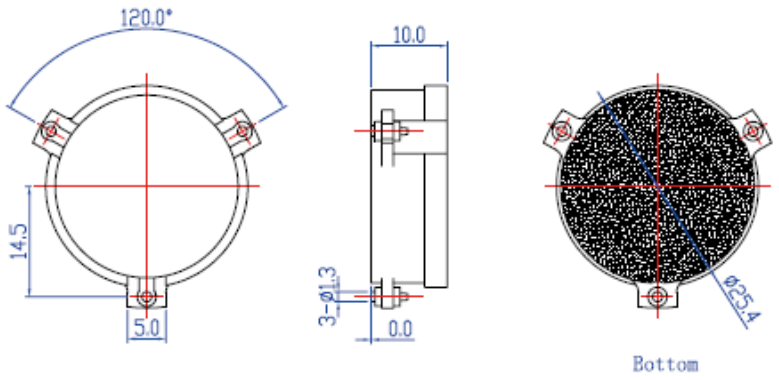

HOW TO ORDER

KTSC – XXX – XXX

Kete SMT Circulators — KTSC

Series Numbers — XXX

Random Numbers — XXX

No. 981, Baozhou Road, Quanzhou, Fujian, China (PC: 362000) ◇Web: www.ketemicro.com
Tel: 86-595-22597735 ◇Fax: 86-595-22557059 ◇E-mail: sales@ketemicro.com